A - A

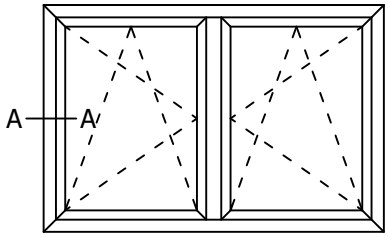

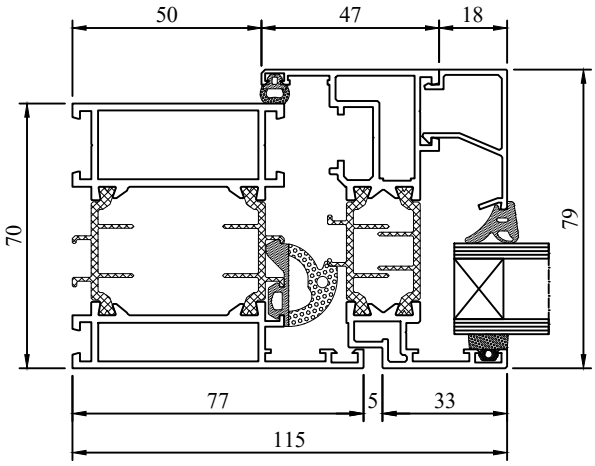

K518102X + K518331X

B - B

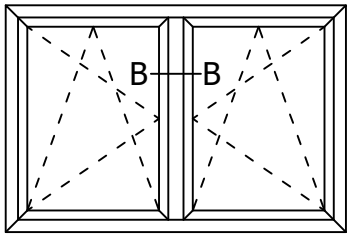

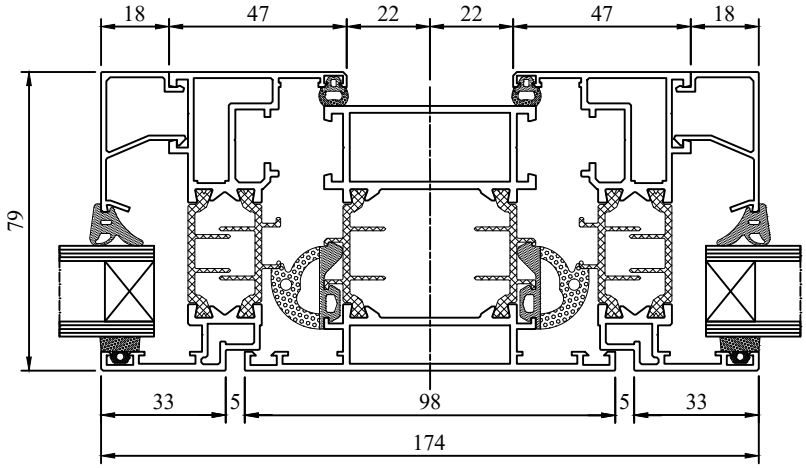

K518331X + K518122X + K518331X

C - C

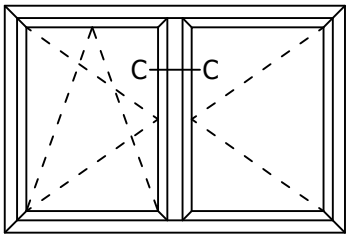

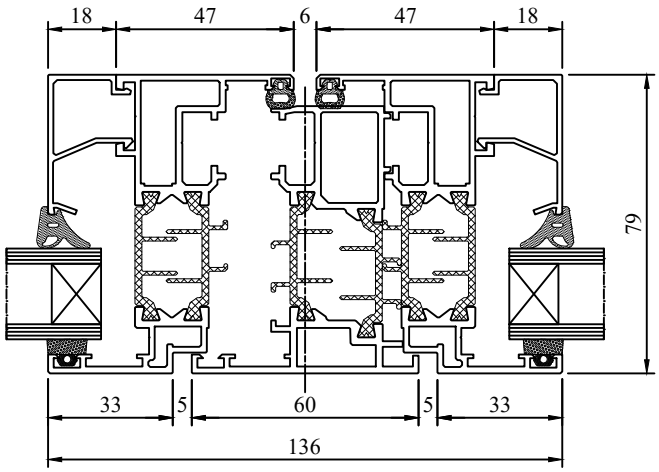

K518331X + K518333X + K518331X

A - A

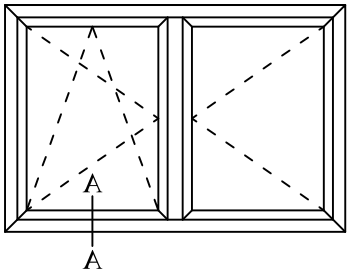

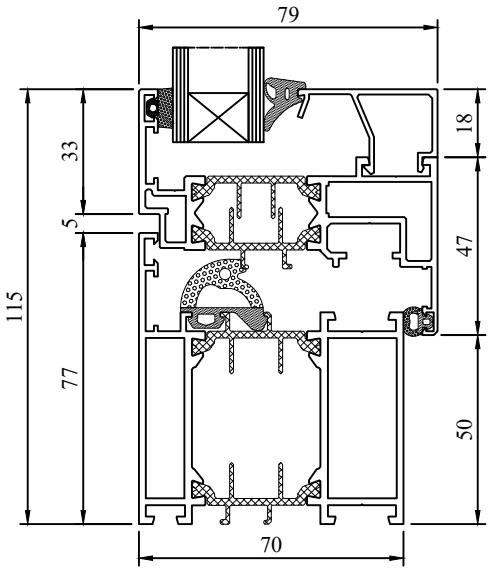

K518102X + K518331X

B - B

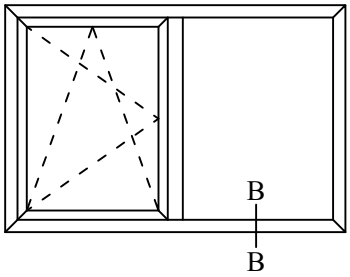

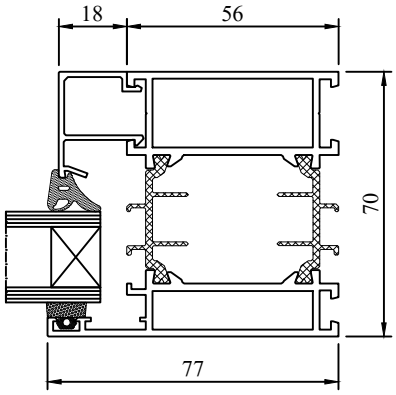

K518102X

C - C

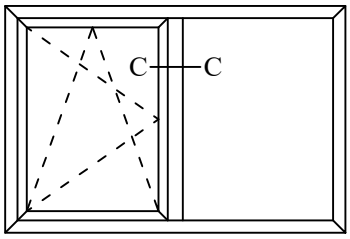

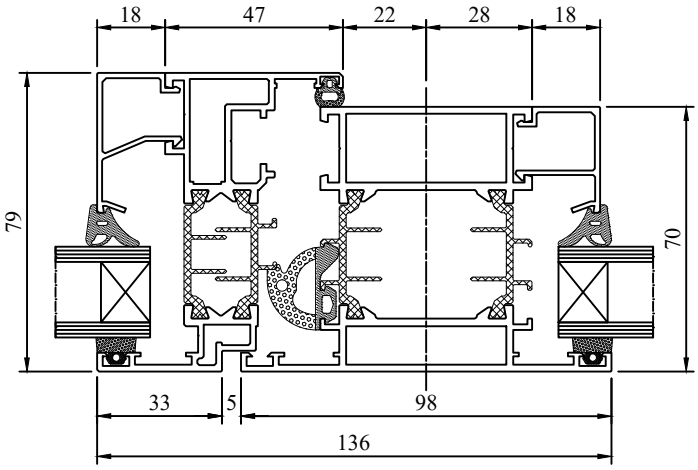

K518331X + K518122X

DRUTEX ENGINEERED FOR YOU	MB70	Przekroje Sections	Querschnitt Sezioni

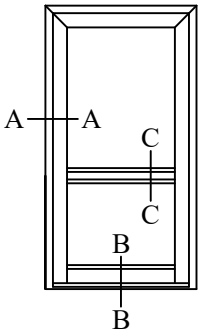

A - A

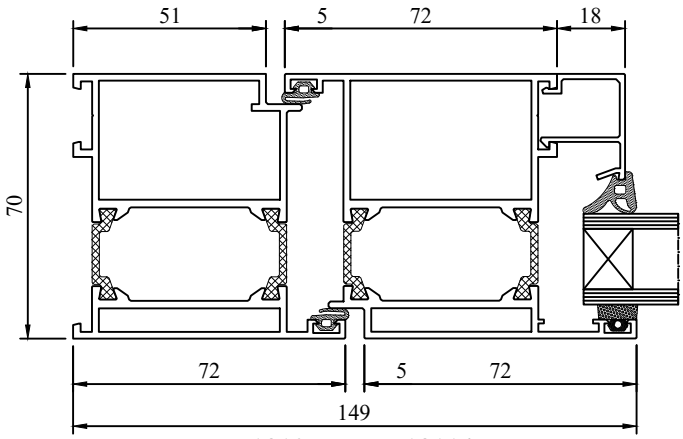

K518105X + K518114X

B - B

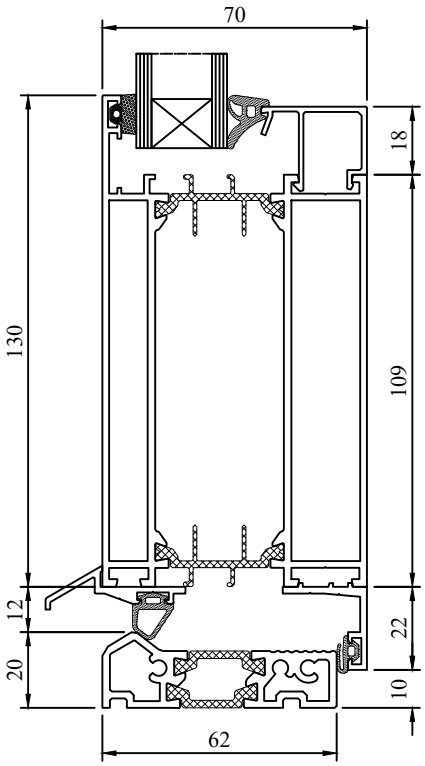

K518103X + K518235X

C - C

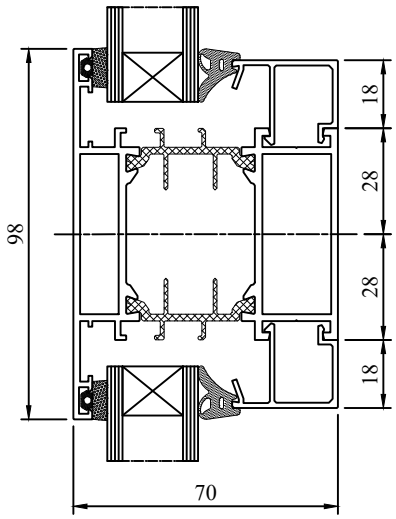

K518122X

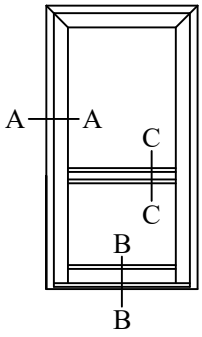

A - A

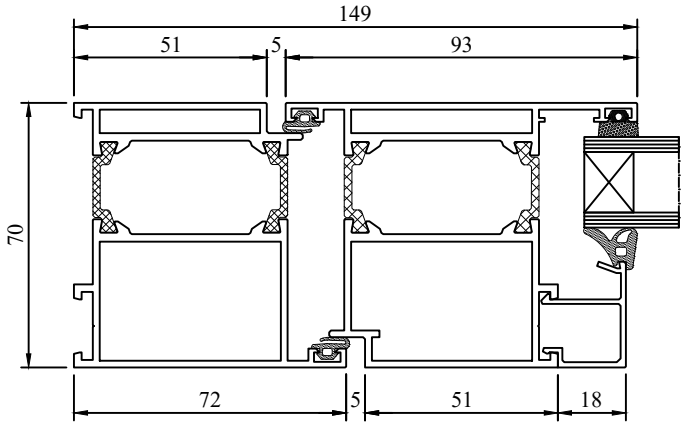

K518106X + K518115X

B - B

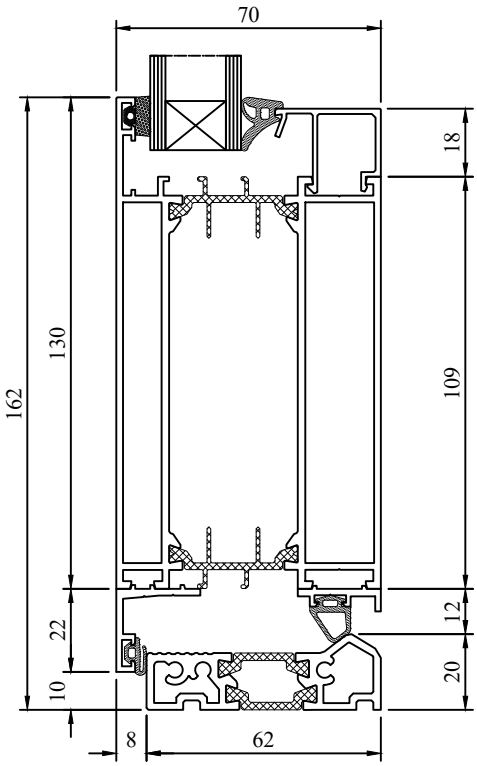

K518103X + K518235X

C - C

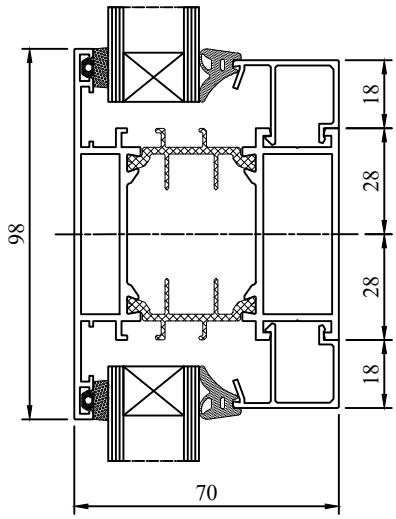

K518122X

DRUTEX ENGINEERED FOR YOU	MB70	Przekroje Sections	Querschnitt Sezioni

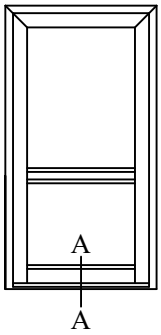

A - A

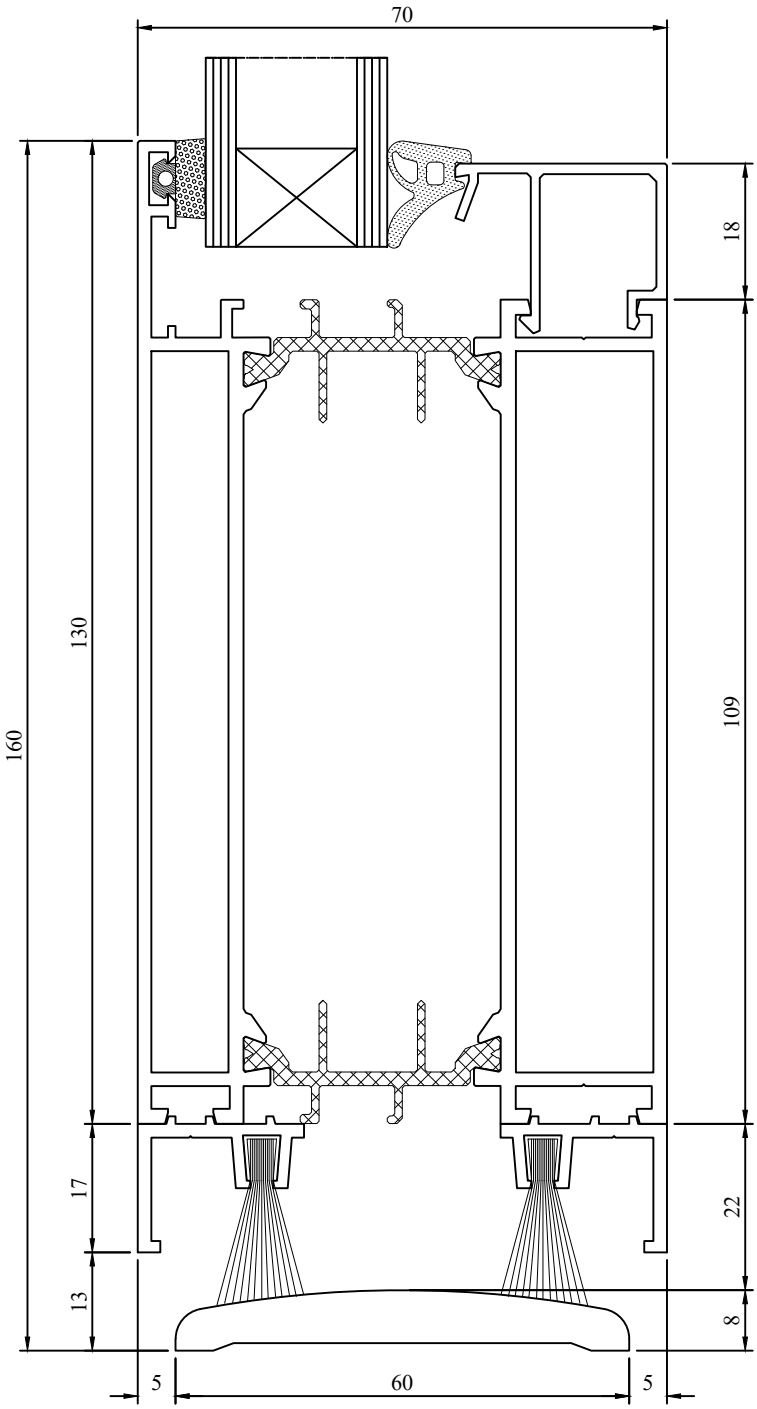

K518103X + K411035X

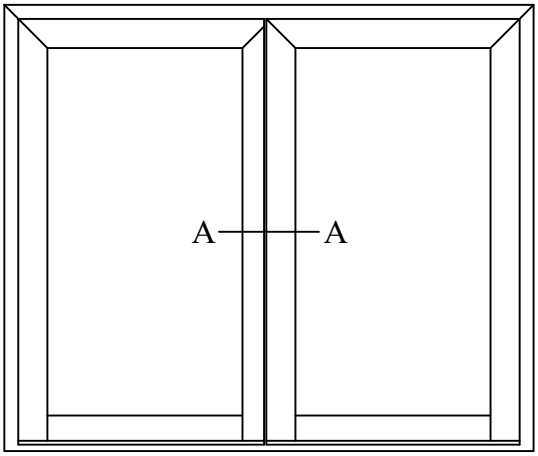

A - A

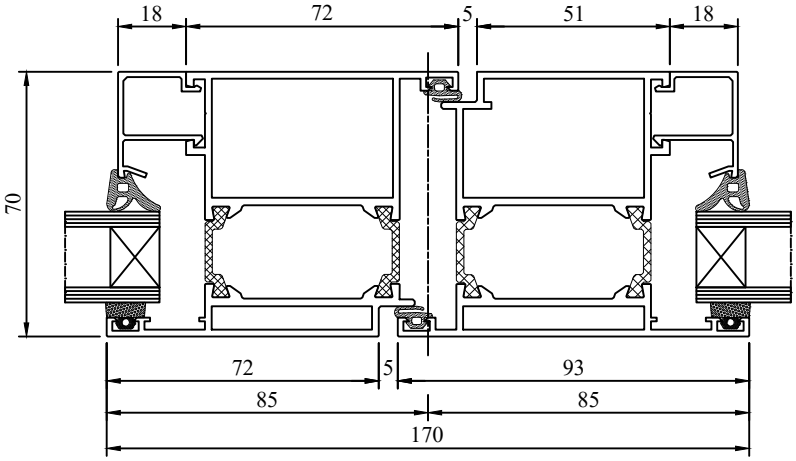

K518114X + K518115X

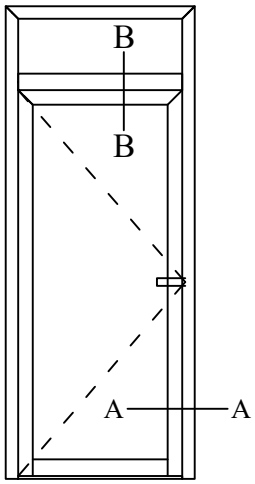

A - A

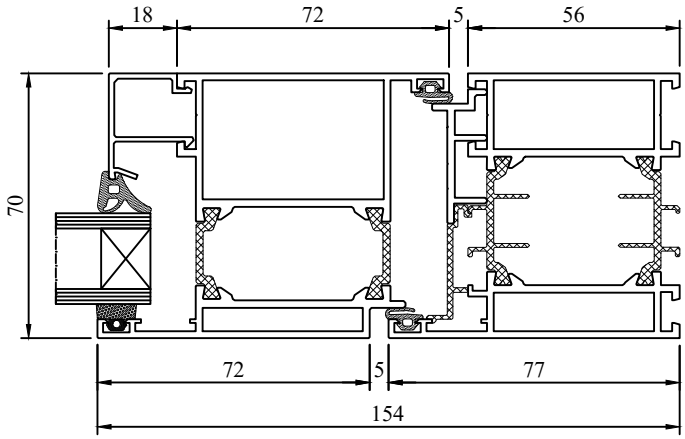

K518114X + K415227X + K518102X

B - B

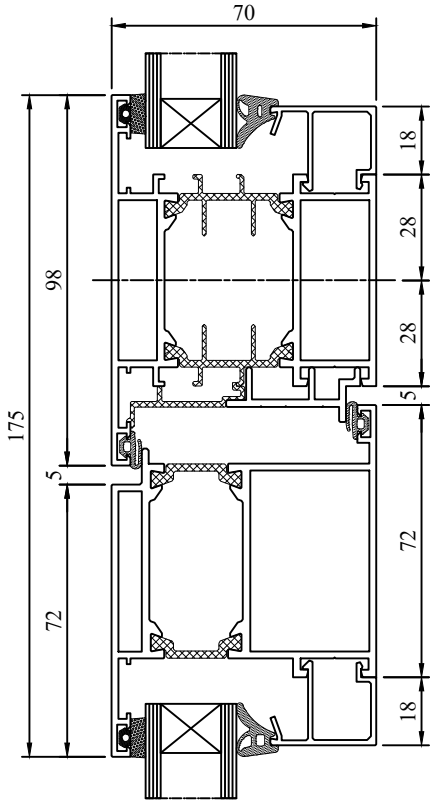

K518122X + K415227X + K518114X

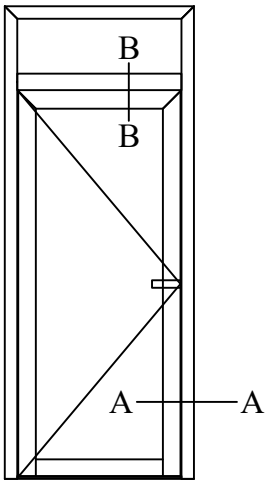

A - A

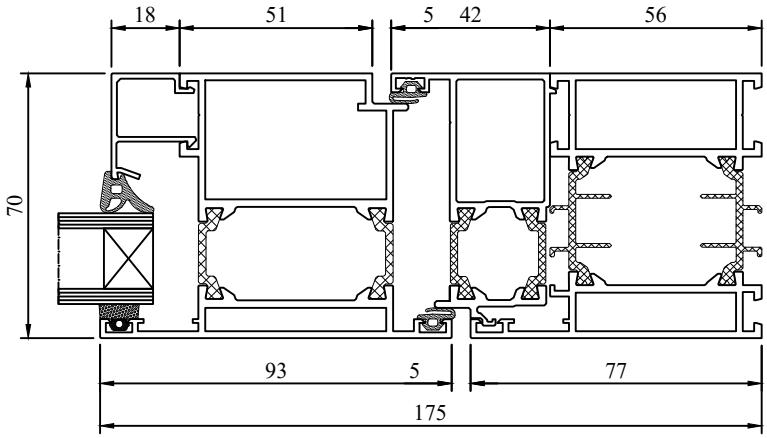

K518115X + K518406X + K518102X

B - B

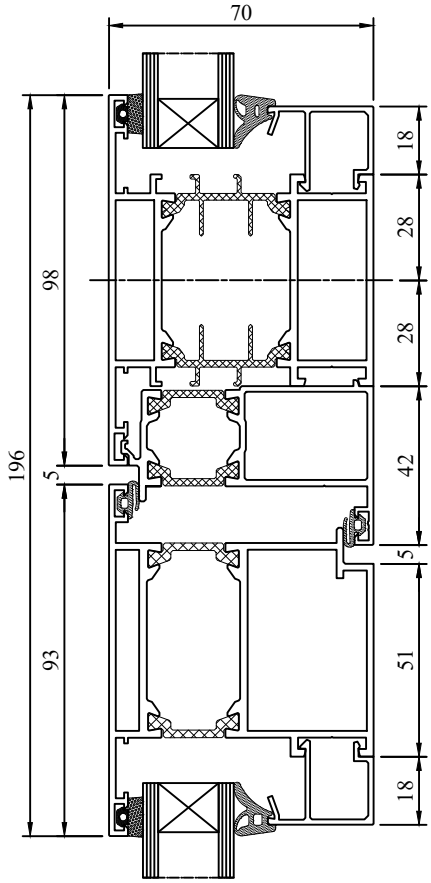

K518122X + K518406X + K518115X

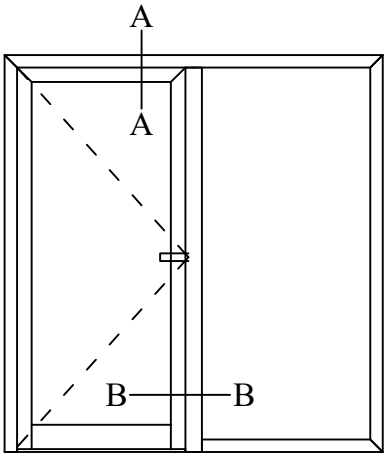

A - A

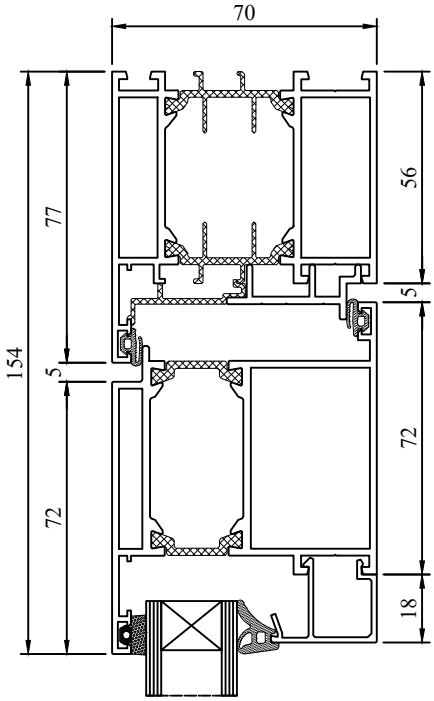

K518102X + K415227X + K518114X

B - B

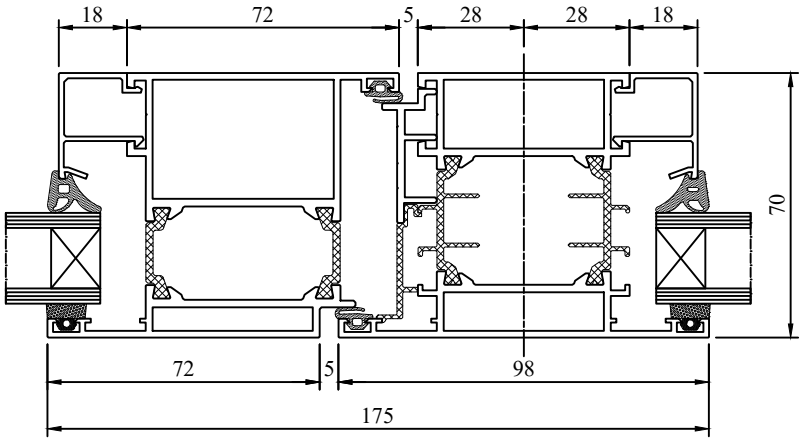

K518114X + K415227X + K518122X

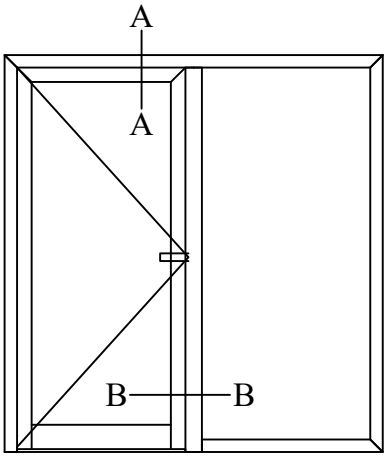

A - A

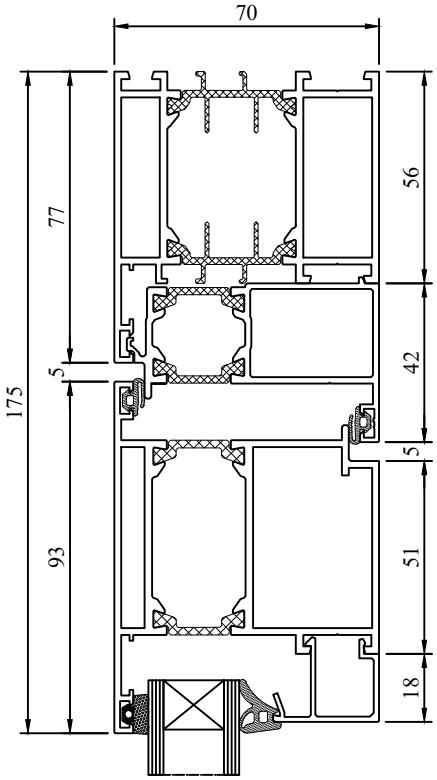

K518102X + K518406X + K518115X

B - B

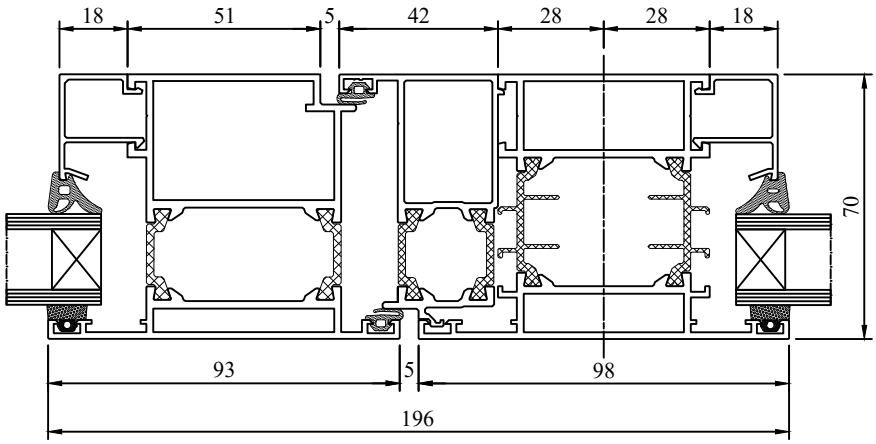

K518115X + K518406X + K518122X

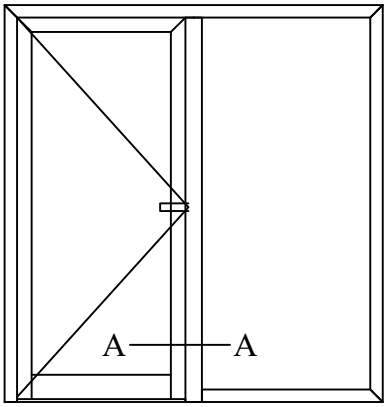

A - A

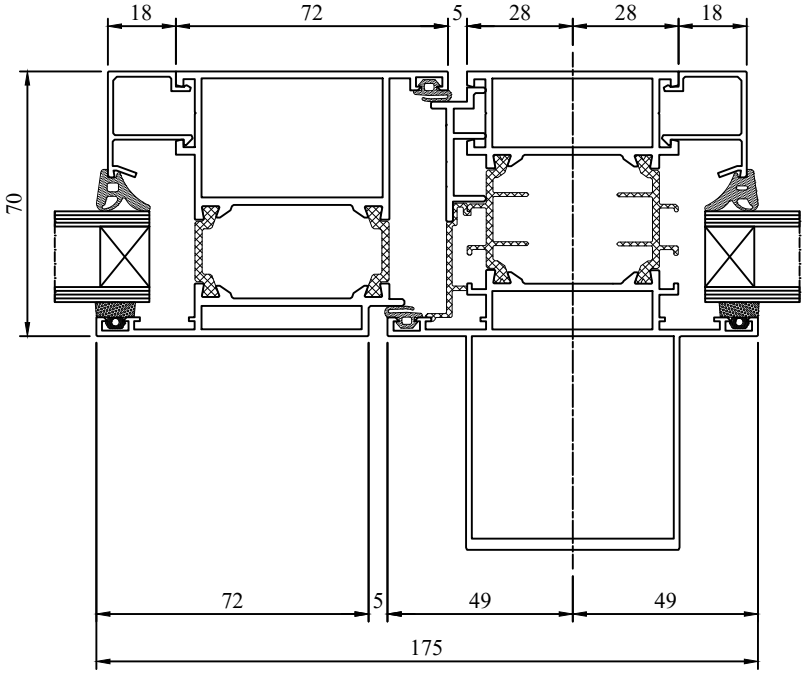

K518114X + K415227X + K518125X

A - A

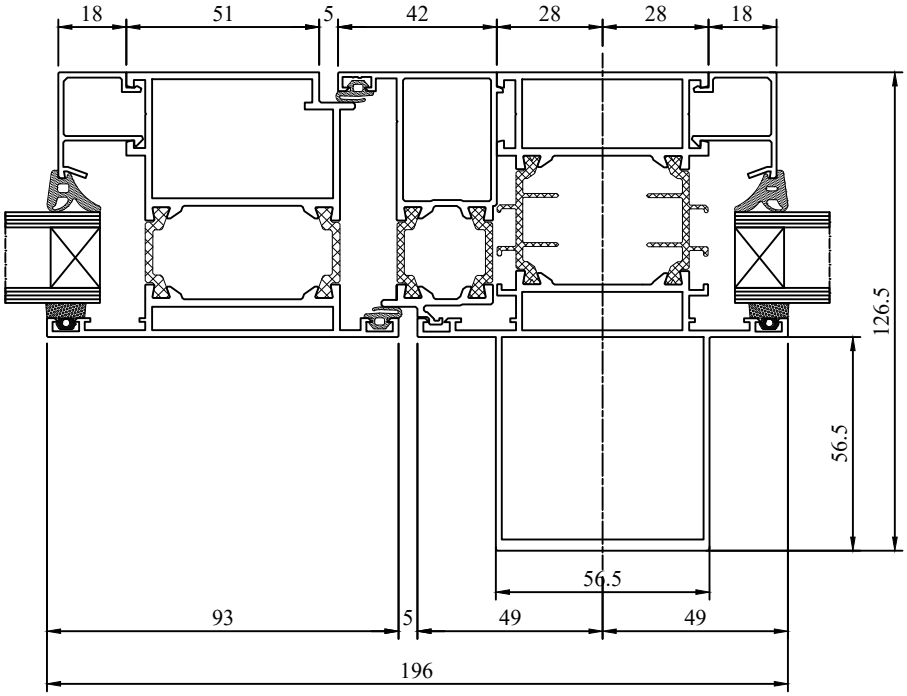

K518115X + K518406X + K518125X

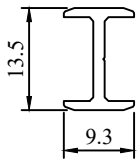

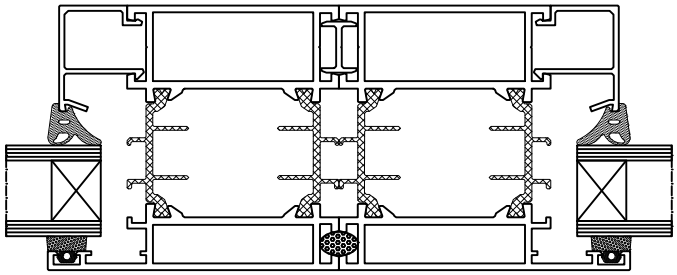

K518102X + K4178370 + K518102X

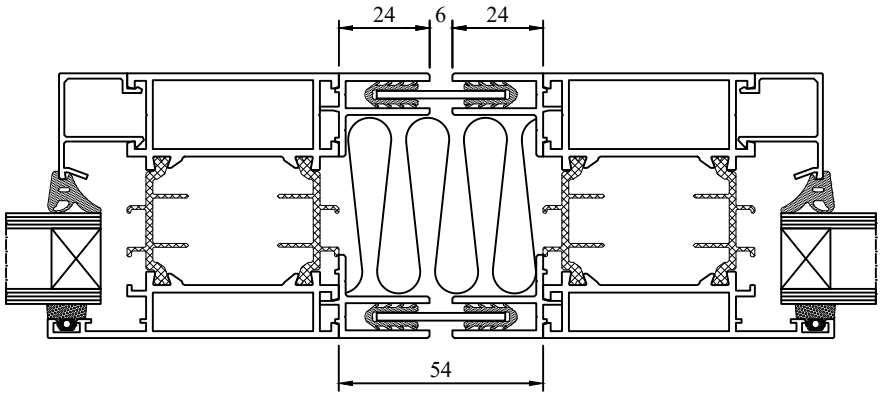

K518102X + K415248X + K518102X

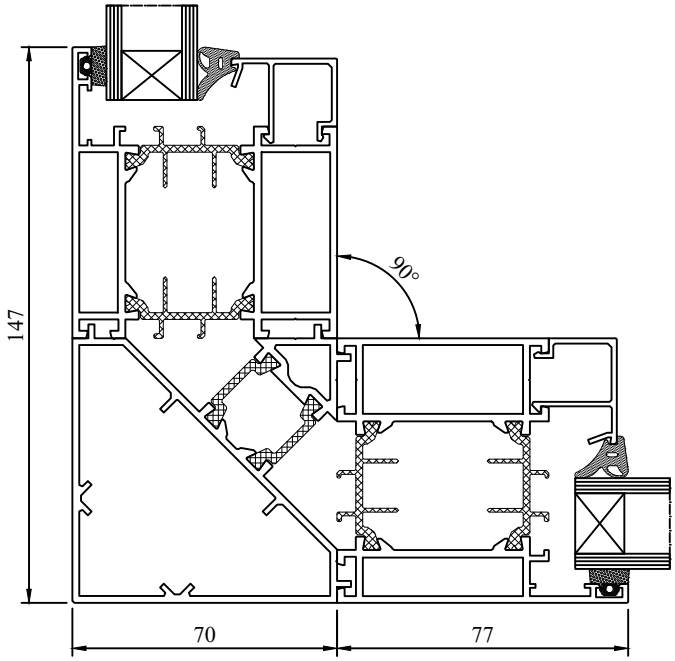

K518102X + K518292X + K518102X

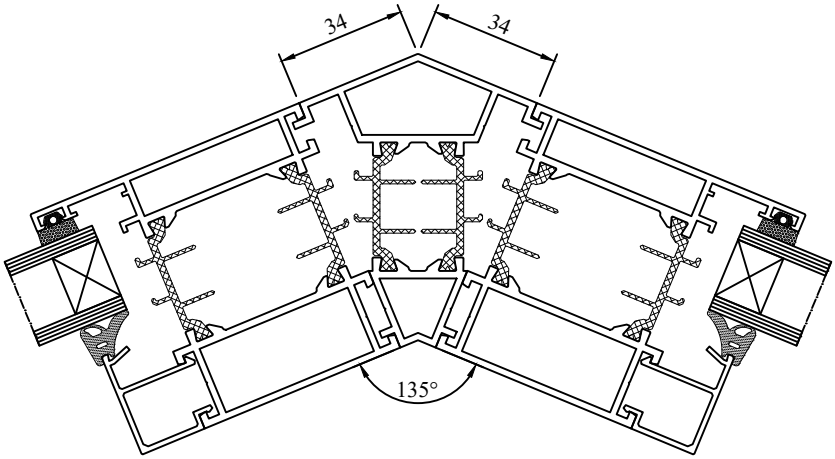

K518102X + K518131X + K518102X

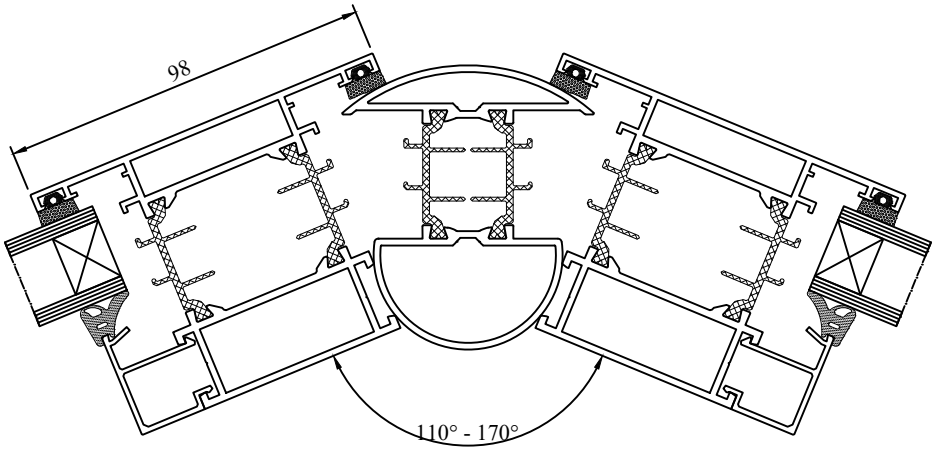

K518122X + K518132X + K518122X

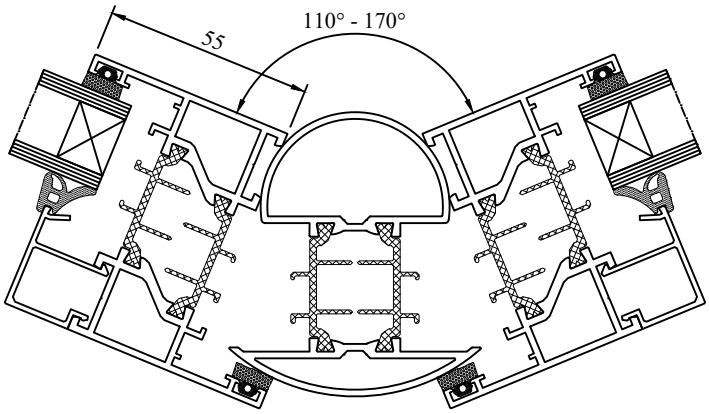

K518133X + K518132X + K518133X

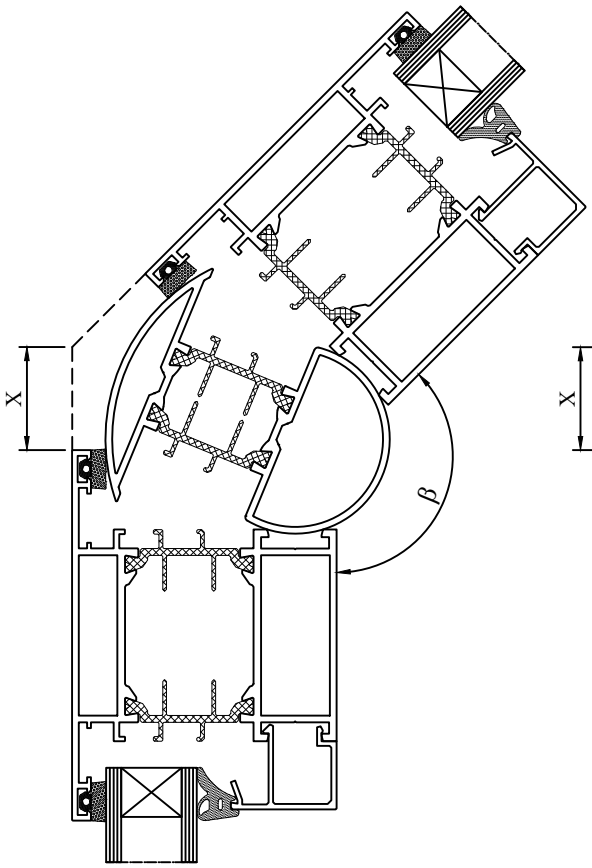

K518122X + K518132X + K518122X

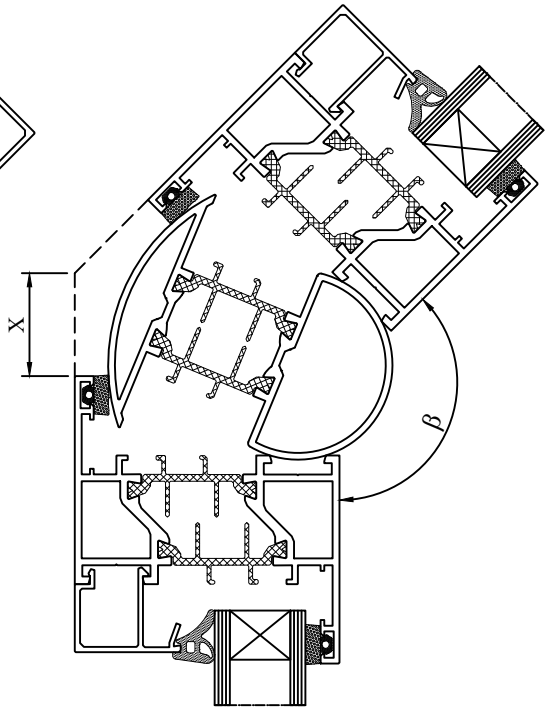

K518133X + K518132X + K518133X

β	X
170	8
165	10,6
160	13,2
155	15,9
150	18,6
145	21,4
140	24,3
135	27,3
130	30,3
125	33,5
120	36,9
115	40,4
110	44,1

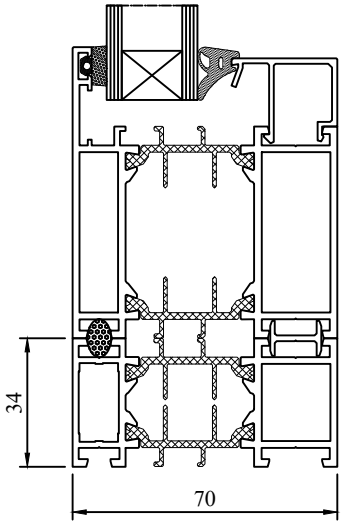

K518102X + K518297X

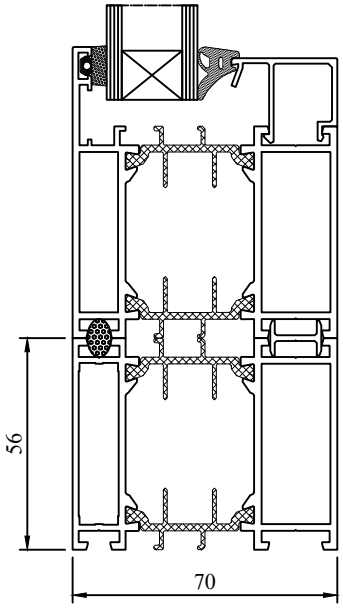

K518102X + K518293X

A - A

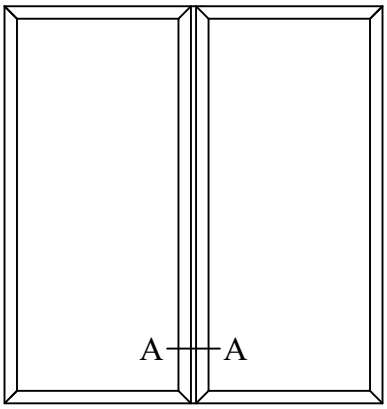

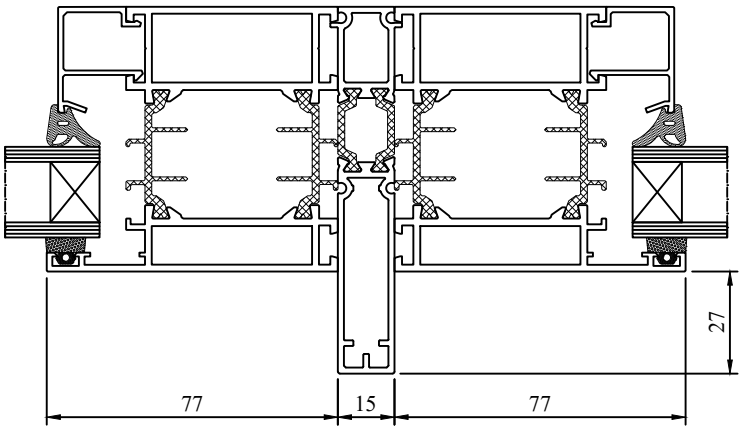

K518102X + K518370X + K518102X

B - B

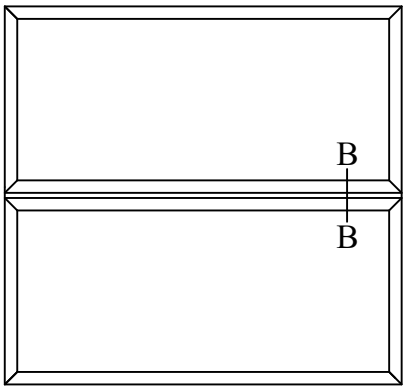

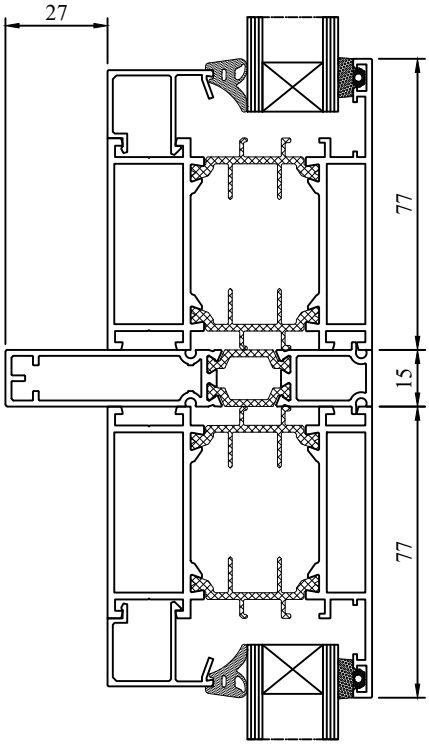

K518102X + K518370X + K518102X

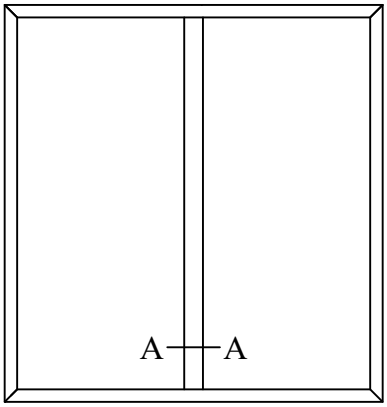

A - A

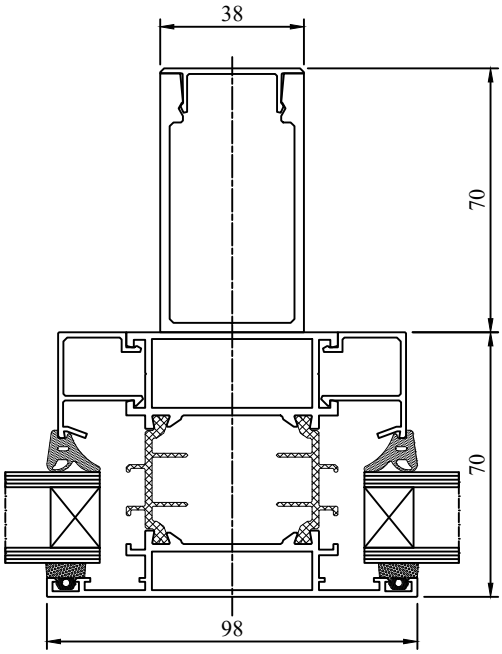

K518122X + K413923X + K413924X

A - A

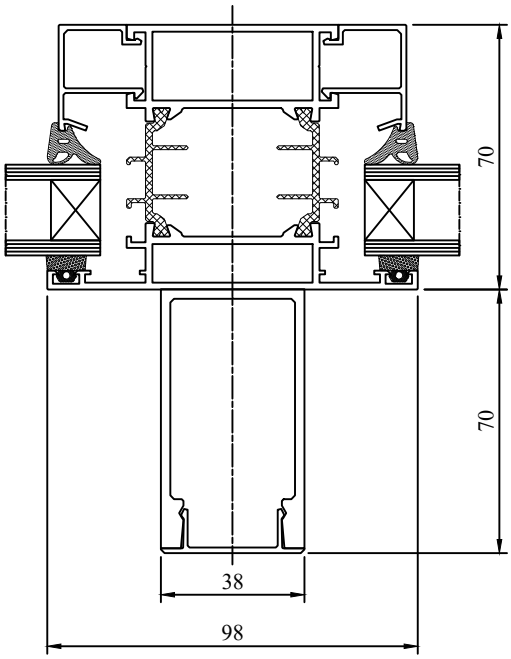

K518122X + K413923X + K413924X

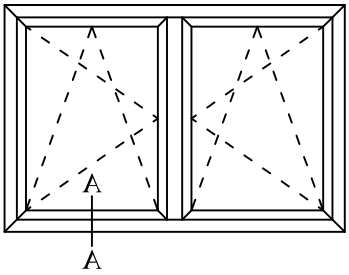

A - A

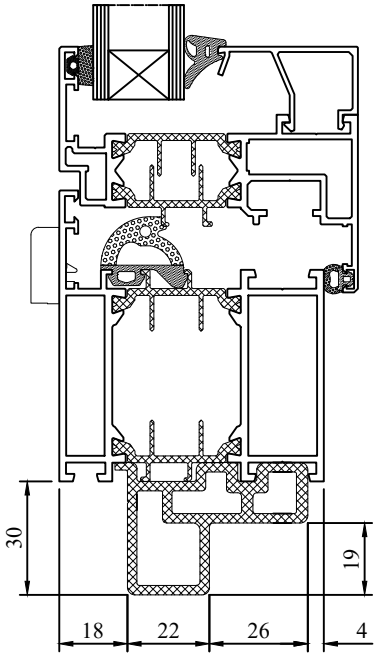

009035

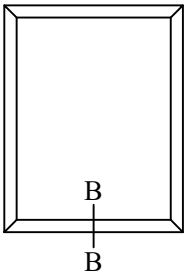

B - B

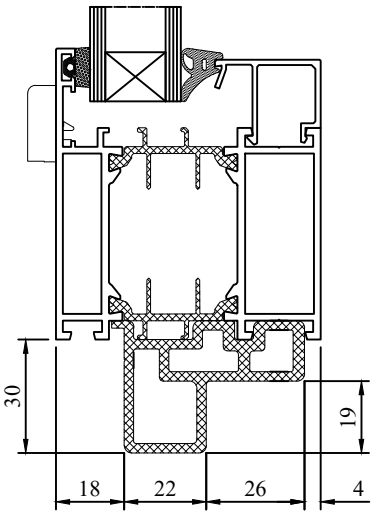

009035